DISCOUNT VALVES

600T SERIES
SPECIFICATION SHEET

MATERIAL SPECIFICATIONS

Part Name	Material
Body	Lead Free Brass
Seat	PTFE
Ball	SS304
Packing Nut	Brass
Stem	Brass
Lock Nut	Ferrum / Zinc Plated
Lock Washer	Ferrum / Zinc Plated
Packing	PTFE
Handle	Ferrum / Chrome Plated
Cap	Lead Free Brass

Lead Free, Full Port Brass Ball Valves
Female NPT * Female NPT

Features & Benefits

- Dezincification Resistent (DZR) Lead Free Brass Material
- Thread Conform ANSI B1.20.1
- Forged Brass Body
- Blow Out Proof Stem Design
- Packing Nut & Packing On The Stem Seal
- Stainless Steel Ball
- Handle With Vinyl Grip
- 600 psi (WOG) 150 psi (WSP) Service
- Temperature Range : -20° F to 300° F

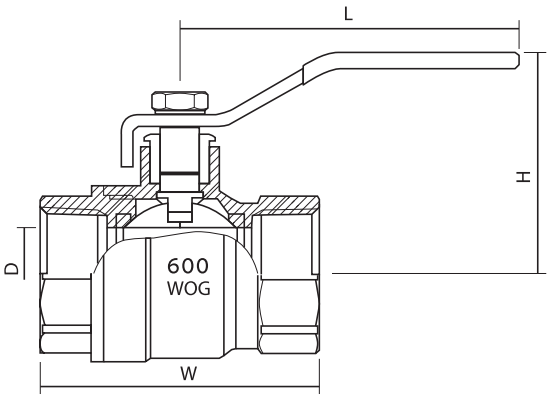

DIMENSIONS

Size	D	L	H	W	Cv	Wt.(lbs.)
1/4"	0.394	3.46	1.68	1.73	8.23	0.306
3/8"	0.394	3.46	1.68	1.73	8.23	0.302
1/2"	0.524	3.46	1.73	1.89	14.56	0.337
3/4"	0.748	3.46	1.89	2.28	29.76	0.542
1"	0.984	4.29	2.14	2.80	51.55	0.928
1-1/4"	1.240	4.29	2.32	3.15	81.70	1.312
1-1/2"	1.476	5.63	2.66	3.44	115.89	1.865
2"	1.949	5.63	3.01	4.06	200.34	2.994